PROJECT NAME: _____

LOCATION: _____

ITEM#: _____ QTY: _____

MODEL: _____

Kratos 78" 3-Door Merchandising Freezer, Swing Door Design



67K-211



67K-229

Features:

- Self-closing doors with magnetic gaskets for tight seal to keep food items fresh
- Dual-pane glass doors prevent fog and keep contents visible
- Interior LED lighting helps create attractive merchandising and increase impulse sales
- 12 Heavy-duty, Epoxy-coated adjustable shelves, with 90lbs capacity each
- Easy-to-use controls and LED display
- Casters with brakes allow you to move the unit where you need it and lock it in place.
- Door locks for additional security when needed.
- Bottom mount compressor enables optimal storage capacity
- Perfect for Grab-n-Go locations, markets, cafeterias, business entrances, gyms and more!
- 2-year Parts & Labor warranty
- 5-year Compressor warranty

Specifications:

Item#	VPN	Color	# Shelves	Refrigerant	Refrigerant Capacity	Cu Ft	Volts	Watts	Amps	HP	Cord Length	Plug	HZ/Phase
175813	67K-211	Black	12	R290a	5.9	57.5	115	1875	16.3	1.5	96"	NEMA 5-20P	60Hz/1PH
214568	67K-229	White	12	R290a	5.9	57.5	115	1875	16.3	1.5	96"	NEMA 5-20P	60Hz/1PH

© 2026 Kratos

PROJECT NAME: _____

LOCATION: _____

ITEM#: _____ QTY: _____

MODEL: _____

Kratos 78" 3-Door Merchandising Freezer, Swing Door Design

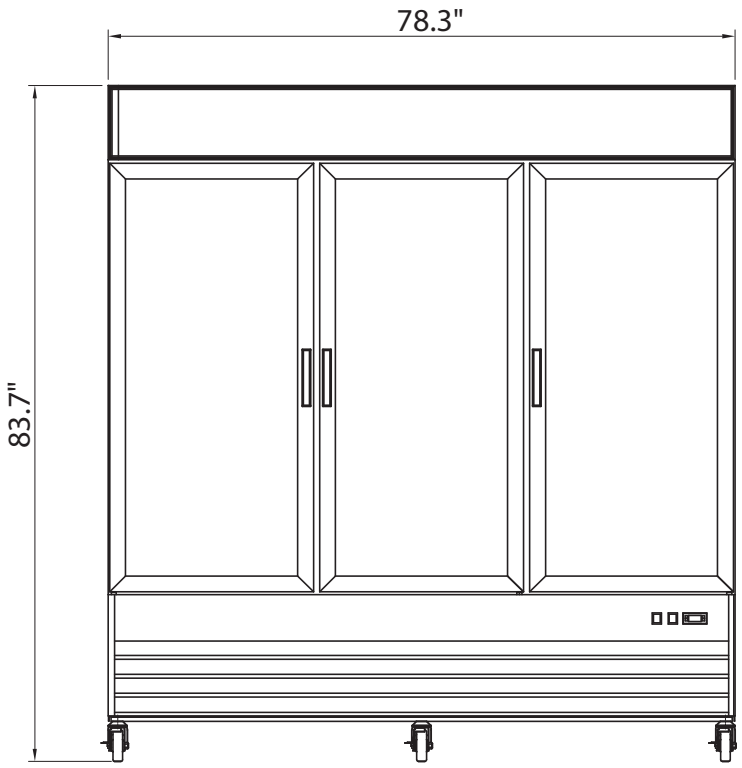

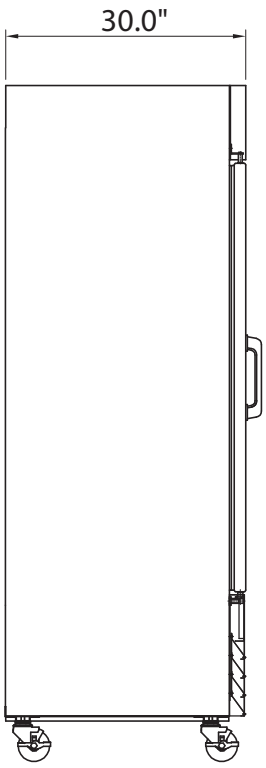

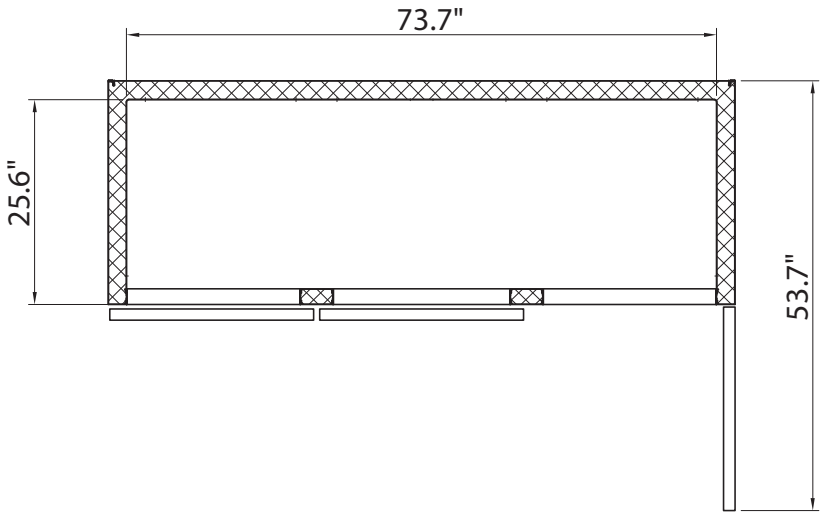

Specifications:

WIDTH	78 3/8"
DEPTH	30"
HEIGHT	83 7/8"
Weight	700 lbs
Interior Width	72 1/2"
Interior Depth	26 7/8"
Interior Height	60"
Shelf Capacity	90lbs each
Casters	5", 3 locking

© 2026 Kratos